Centre Scientifique et Technique du Bâtiment
84 avenue Jean Jaurès
CHAMPS-SUR-MARNE
F-77447 Marne-la-Vallée Cedex 2

Tél. : (33) 01 64 68 82 82
Fax : (33) 01 60 05 70 37

Designated according to Article 29 of Regulation (EU) No 305/2011

Member of EOTA
www.eota.eu

European Technical Assessment

ETA-99/0009 of 06/01/2015

English translation prepared by CSTB - Original version in French language

General Part

Nom commercial *Trade name*	**Hilti HDA and HDA-R**
Famille de produit *Product family*	**Cheville métallique à verrouillage de forme par auto ancrage dans le béton, en acier galvanisé diamètres M10, M12, M16 et M20 et en acier inoxydable diamètres M10, M12 et M16.** ***Self-cutting undercut anchor, made of galvanized steel for use in cracked and uncracked concrete: sizes M10, M12, M16 and M20 and made of stainless steel for use in cracked and uncracked concrete: sizes M10, M12 and M16.***
Titulaire *Manufacturer*	Hilti Corporation Feldkircherstrasse 100 FL-9494 Schaan Principality of Liechtenstein
Usine de fabrication e *Manufacturing plants*	Hilti plants
Cette evaluation contient: *This Assessment contains*	38 pages incluant 35 annexes qui font partie intégrante de cette évaluation 38 *pages including 35 annexes which form an integral part of this assessment*
Base de l'ETE *Basis of ETA*	ETAG 001, Version April 2013, utilisée en tant que EAD *ETAG 001, Edition April 2013 used as EAD*
Cette evaluation remplace: *This Assessment replaces*	ATE-99/0009 issu le 25/03/2013 *ETA-99/0009 issued at 25/03/2013*

Translations of this European Technical Assessment in other languages shall fully correspond to the original issued document and should be identified as such. Communication of this European Technical Assessment, including transmission by electronic means, shall be in full. However, partial reproduction may be made, with the written consent of the issuing Technical Assessment Body. Any partial reproduction has to be identified as such.

Specific Part

1 Technical description of the product

The HILTI HDA anchor in the range of M10 to M20 is a self-cutting undercut anchor made of galvanised steel. The HILTI HDA-R anchor in the range of M10 to M16 is a self-cutting undercut anchor made of stainless steel. Both are available as pre-setting (HDA-P and HDA-PR version) and as through-fastening anchor (HDA-T and HDA-TR version). They are placed into a hole drilled with a special stop drill bit and self-cutting undercut using a special setting tool. The nut is torque tightened to complete the fastening of the fixture.

The illustration and the description of the product are given in Annexes A.

2 Specification of the intended use

The performances given in Section 3 are only valid if the anchor is used in compliance with the specifications and conditions given in Annexes B.

The provisions made in this European technical assessment are based on an assumed working life of the anchor of 50 years. The indications given on the working life cannot be interpreted as a guarantee given by the producer, but are to be regarded only as a means for choosing the right products in relation to the expected economically reasonable working life of the works.

3 Performance of the product

3.1 Mechanical resistance and stability (BWR 1)

Essential characteristic	Performance
Characteristic tension resistance in case of static and quasi-static loading according ETAG001, Annex C	See Annex C1 and Annex C2
Characteristic tension resistance in case of static and quasi-static loading according CEN/TS 1992-4	See Annex C3 and Annex C4
Displacements under tension loads in case of static and quasi-static loading	See Annex C5
Characteristic shear resistance in case of static and quasi-static loading according ETAG001, Annex C	See Annex C6 and Annex C7
Characteristic shear resistance in case of static and quasi-static loading according CEN/TS 1992-4	See Annex C8 and Annex C9
Displacements under shear loads in case of static and quasi-static loading	See Annex C10
Characteristic tension resistance in case of seismic performance category C1 according EOTA TR045	See Annex C11 and Annex C12
Displacements under tension loads in case of seismic performance category C1	See Annex C11 and Annex C12
Characteristic shear resistance in case of seismic performance category C1 according EOTA TR045	See Annex C13 and Annex C14
Displacements under shear loads in case of seismic performance category C1	See Annex C13 and Annex C14
Characteristic tension resistance in case of seismic performance category C2 according EOTA TR045	See Annex C15 and Annex C16
Displacements under tension loads in case of seismic performance category C2	See Annex C15 and Annex C16
Characteristic shear resistance in case of seismic performance category C2 according EOTA TR045	See Annex C17 and Annex C18
Displacements under shear loads in case of seismic performance category C2	See Annex C17 and Annex C18

3.2 Safety in case of fire (BWR 2)

Essential characteristic	Performance
Reaction to fire	Anchorages satisfy requirements for Class A1

3.3 Hygiene, health and the environment (BWR 3)

Regarding dangerous substances contained in this European technical approval, there may be requirements applicable to the products falling within its scope (e.g. transposed European legislation and national laws, regulations and administrative provisions). In order to meet the provisions of the Construction Products Directive, these requirements need also to be complied with, when and where they apply.

3.4 Safety in use (BWR 4)

For Basic requirement Safety in use the same criteria are valid as for Basic Requirement Mechanical resistance and stability.

3.5 Protection against noise (BWR 5)

Not relevant.

3.6 Energy economy and heat retention (BWR 6)

Not relevant.

3.7 Sustainable use of natural resources ((BWR 7)

For the sustainable use of natural resources no performance was determined for this product.

3.8 General aspects relating to fitness for use

Durability and Serviceability are only ensured if the specifications of intended use according to Annex B 1 are kept.

4 Assessment and verification of constancy of performance (AVCP)

According to the Decision 96/582/EC of the European Commission[1], as amended, the system of assessment and verification of constancy of performance (see Annex V to Regulation (EU) No 305/2011) given in the following table apply.

Product	Intended use	Level or Class	System
Metal anchors for use in concrete	For fixing and/or supporting to concrete, structural elements (which contributes to the stability of the works) or heavy units	—	1

5 Technical details necessary for the implementation of the AVCP system

Technical details necessary for the implementation of the Assessment and verification of constancy of performance (AVCP) system are laid down in the control plan deposited at Centre Scientifique et Technique du Bâtiment.

The manufacturer shall, on the basis of a contract, involve a notified body approved in the field of anchors for issuing the certificate of conformity CE based on the control plan.

Issued in Marne La Vallée on 06-01-2015 by

Charles Baloche *The original French version is signed*

Directeur technique

---

1 Official Journal of the European Communities L 254 of 08.10.1996

Pre-setting anchor HDA-P and HDA-PR (Prepositioning)

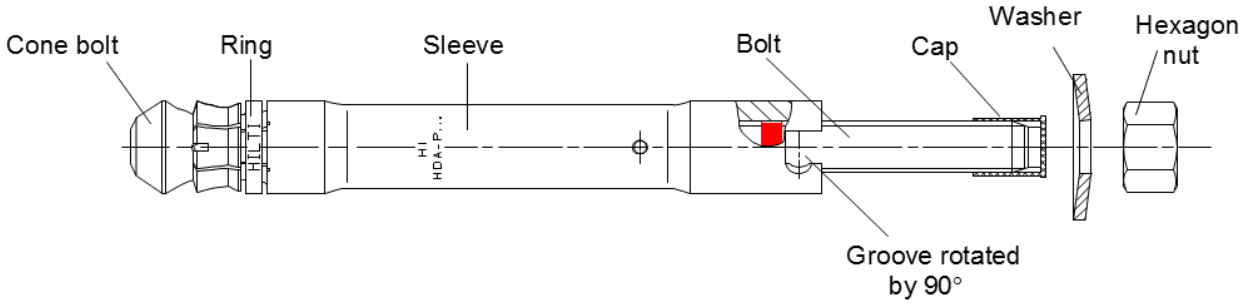

Pre-setting anchor HDA-P and HDA-PR (Prepositioning)

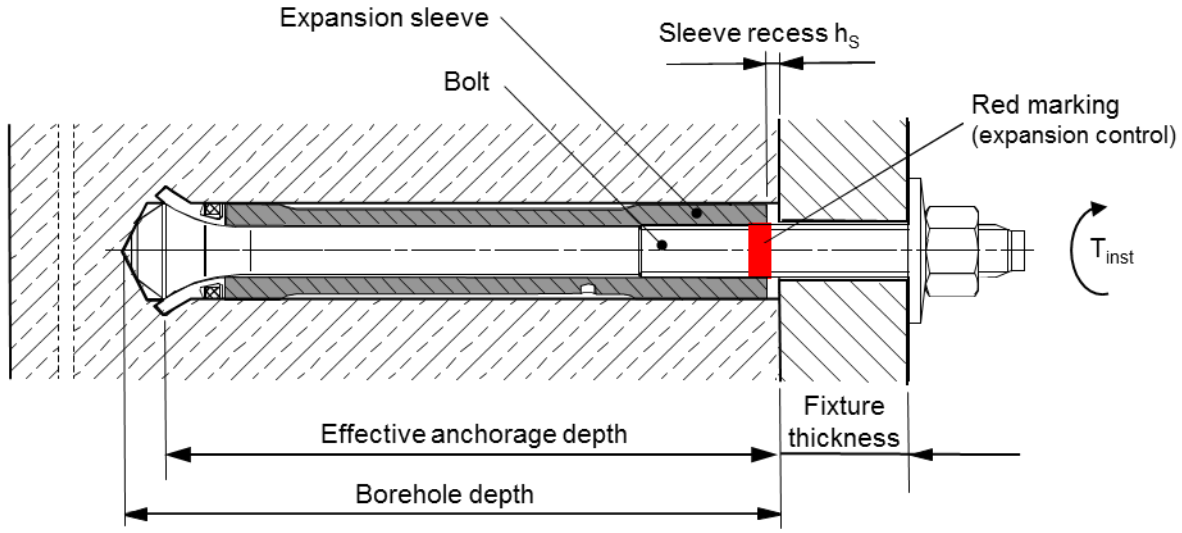

Intended use:

HDA-P for use in cracked or non-cracked concrete in dry internal conditions only
HDA-PR for use in cracked or non-cracked concrete (any conditions but very aggressive)

Self-cutting undercut anchor HDA and HDA-R	**Annex A1**
Product description – Installation condition HDA-P and HDA-PR	

Through-fastening anchor HDA-T and HDA-TR (Postpositioning)

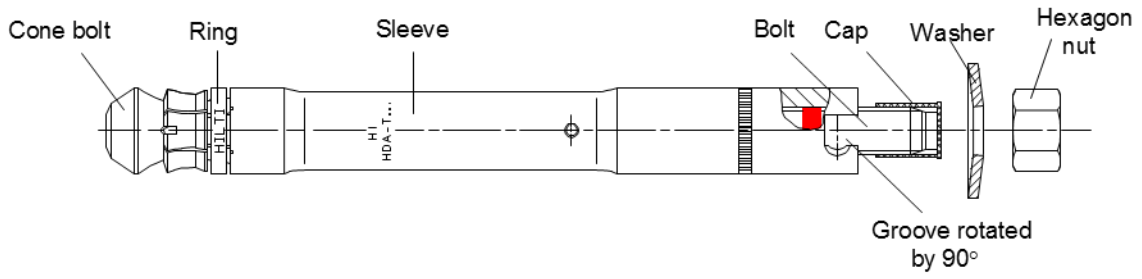

Through-fastening anchor HDA-T and HDA-TR (Postpositioning)

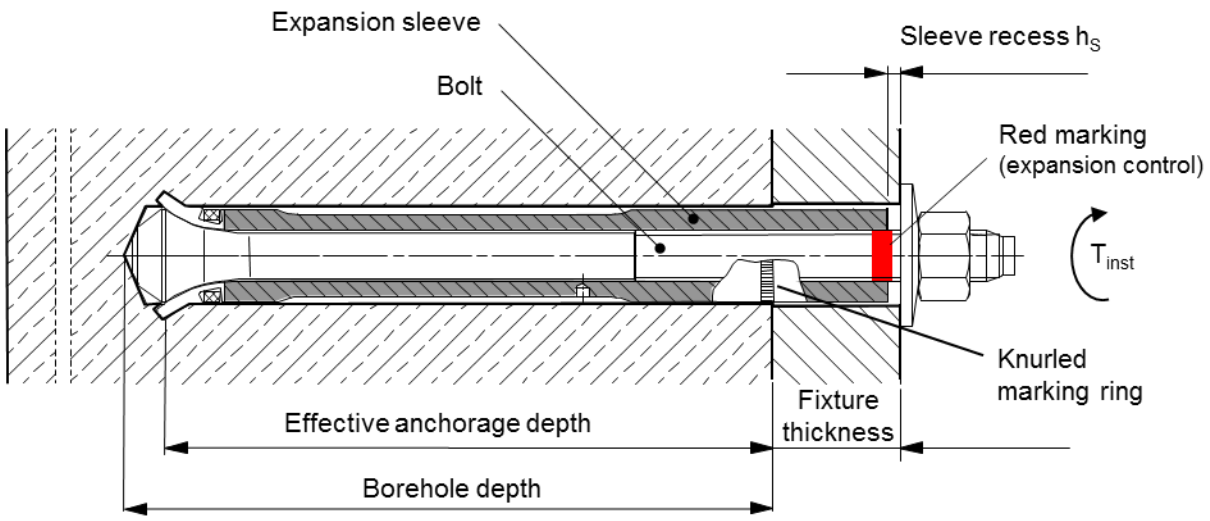

Intended use:

HDA-T for use in cracked or non-cracked concrete in dry internal conditions only

HDA-TR for use in cracked or non-cracked concrete (any conditions but very aggressive)

Self-cutting undercut anchor HDA and HDA-R	**Annex A2**
Product description – Installation condition HDA-T and HDA-TR	

Through-fastening anchor HDA-T and HDA-TR with centering washer (Postpositioning)

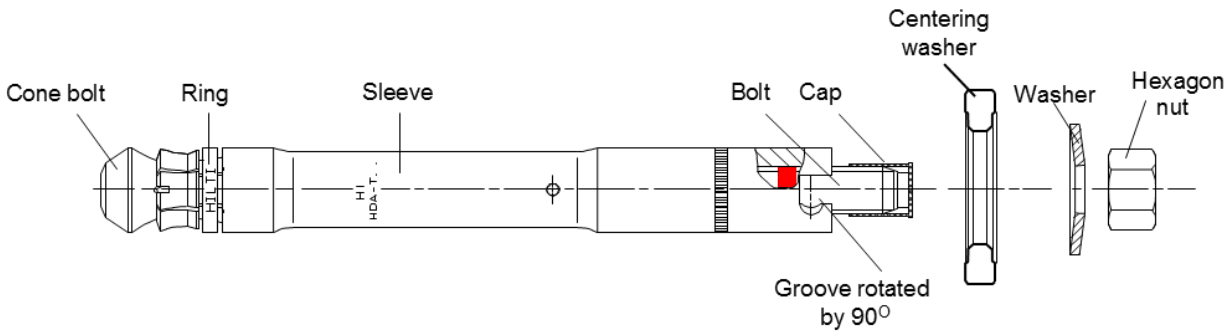

Through-fastening anchor HDA-T and HDA-TR with centering washer (Postpositioning)

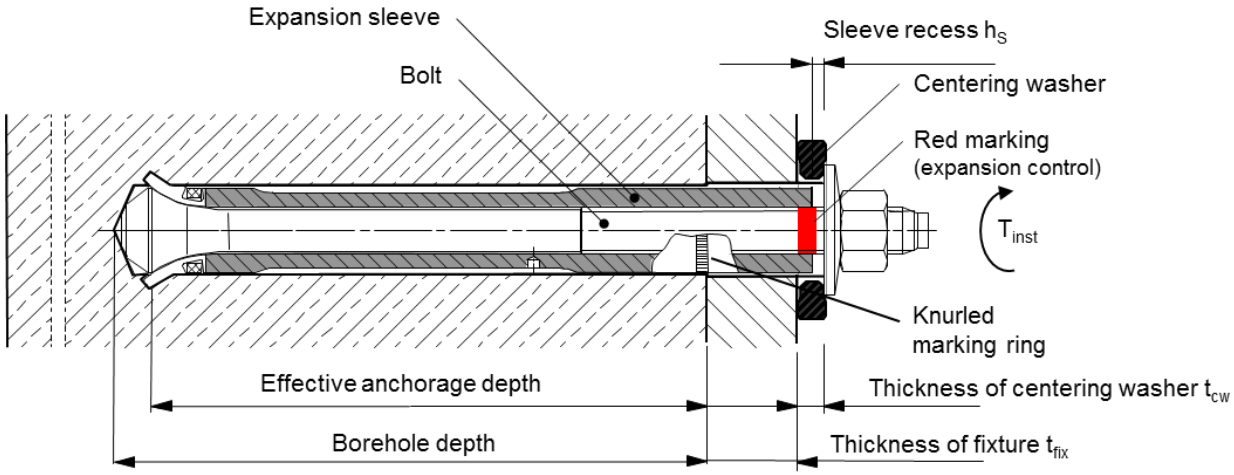

The maximum fastenable thickness $t_{fix,max}$ (see Table 4, Annex B7) is kept if following equation is fulfilled: $t_{fix,max} \geq t_{fix} + t_{cw}$

with:

t_{fix} … thickness of the fixture

t_{cw} … thickness of the centering washer (5mm for all sizes)

Note: The centering washer must be used for the drilling of the hole to ensure the proper embedment depth.

Self-cutting undercut anchor HDA and HDA-R	**Annex A3**
Product description – Installation condition HDA-T and HDA-TR with centering washer	

Pre-setting anchor HDA-P and HDA-PR (Prepositioning)

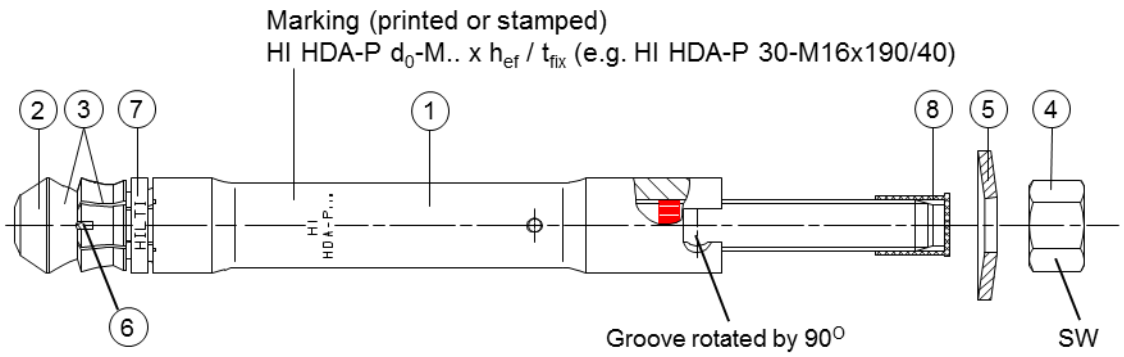

Through-fastening anchor HDA-T and HDA-TR (Postpositioning)

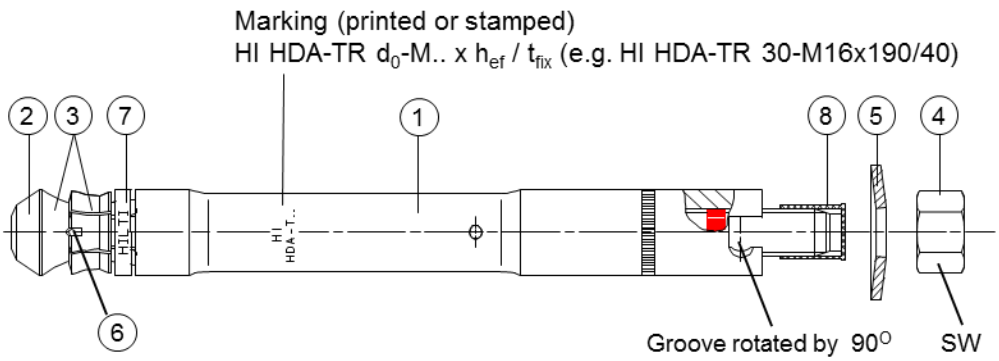

Through-fastening anchor HDA-T and HDA-TR with centering washer (Postpositioning)

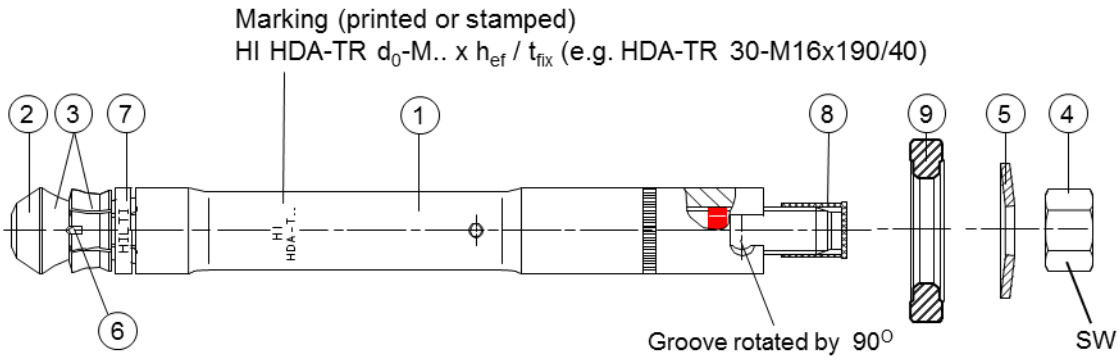

Self-cutting undercut anchor HDA and HDA-R	**Annex A4**
Product description - Material of anchor HDA-P, HDA-PR, HDA-T and HDA-TR	

Table 1a: Materials HDA-P and HDA-T

Part	Designation	HDA-P / HDA-T (galvanized ≥5μm)
1	Sleeve	Machined carbon steel with brazed tungsten carbide tips
2	Bolt	M10 - M16: Cold formed steel, steel strength 8.8 M20: Cone machined, rod steel strength 8.8
3	Coating of bolt and sleeve	Galvanized 5-25μm
4	Hexagon nut	M10 - M16: Class 8, h=1*d, galvanized M20: Class 8, galvanized
5	Washer	M10 - M16: Spring washer, galvanized or coated M20: Washer, galvanized
6	Cutting edges	Tungsten carbide
7	Ring	Plastic ring
8	Cap	Plastic cap
9	Centering washer	Machined steel

Table 1b: Materials HDA-PR and HDA-TR

Part	Designation	HDA-PR / HDA-TR
1	Sleeve	Machined stainless steel 1.4401, 1.4404, or 1.4571 with brazed tungsten carbide tips
2	Bolt	Rod: machined stainless steel 1.4401, 1.4404 or 1.4571 Cone: machined stainless steel 1.4401, 1.4404 or 1.4571
3	Coating of cone	Hardchrome > 10 μm
4	Hexagon nut	Grade A4-80, h=1*d
5	Washer	Spring washer stainless steel
6	Cutting edges	Tungsten carbide
7	Ring	Plastic ring
8	Cap	Plastic cap
9	Centering washer	Machined stainless steel, 1.4401

Specifications of intended use

Anchorages subject to:

- Static and quasi-static loading
- Seismic actions for Performance Category C1 and Performance Category C2

Base materials:

- Reinforced or unreinforced normal weight concrete of strength classes C 20/25 at least to C50/60 at most according to EN 206: 2000-12.
- Cracked concrete and non-cracked concrete

Use conditions (Environmental conditions):

- The HDA-P and HDA-T anchors may only be used in concrete subject to dry internal conditions.
- The HDA-PR and HDA-TR anchors may be used in concrete subject to dry internal conditions and also in concrete subject to external atmospheric exposure (including industrial and marine environment), or exposure in permanently damp internal conditions, if no particular aggressive conditions exist.

  Note: Particular aggressive conditions are e.g. permanent, alternating immersion in seawater or the splash zone of seawater, chloride atmosphere of indoor swimming pools or atmosphere with extreme chemical pollution (e.g. in desulphurization plants or road tunnels where de-icing materials are used).

Design:

- The anchorages are designed in accordance with the ETAG001 Annex C “Design Method for Anchorages” or CEN/TS 1992-4-4 "Design of fastenings for use in concrete” under the responsibility of an engineer experienced in anchorages and concrete work.
- For seismic application the anchorages are designed in accordance with EOTA TR045 “Design of Metal Anchors For Use In Concrete Under Seismic Actions”.
- Verifiable calculation notes and drawings are prepared taking account of the loads to be anchored. The position of the anchor is indicated on the design drawings.

Installation:

- Anchor installation carried out by appropriately qualified personnel and under the supervision of the person responsible for technical matters of the site.
- Use of the anchor only as supplied by the manufacturer without exchanging the components of an anchor.
- Anchor installation in accordance with the manufacturer's specifications and drawings and using the appropriate tools (hammer drill, setting tool, stop drill bit, centering washer if needed).
- Thickness of the fixture corresponding to the range of required thickness values for the type of anchor.
- Checks before placing the anchor to ensure that the strength class of the concrete in which the anchor is to be placed is in the range given and is not lower than that of the concrete to which the characteristic loads apply.
- Check of concrete being well compacted, e.g. without significant voids
- Cleaning the hole of drilling dust
- Anchor installation ensuring the specified embedment depth using a special required stop drill bit
- Anchor installation ensuring complete expansion of the sleeve with checking that the non-threaded coloured ring marking on the bolt is visible above the top edge of the anchor sleeve; therefore it is required using the special setting tool, that is the appropriate depth ring marking of the setting tool at least flush with the concrete surface (pre-setting) respecting with the fixture surface (through-fastening).
- Anchor installation ensuring complete shear load capacity, the recess of the top edge of the sleeve respecting with the concrete surface (pre-setting) or with surface of the fixture (through-fastening) has to be in the specified range according to Annex B9; the use of a centering washer (see Annex A3) ensures the shear load capacity for HDA-T anchors with the minimum fixture thickness according Annex C6 and/or Annex C7.
- Keeping of the edge distance and spacing to the specified values without minus tolerances.
- Positioning of the drill holes and the undercut without damaging the reinforcement.
- In case of aborted hole, drilling of new hole at a minimum distance of twice the depth of the aborted hole, or smaller distance provided the aborted drill hole is filled with high strength mortar and no shear or oblique tension loads in the direction of aborted hole.
- Application of the torque moment given in Annex B9 using a calibrated torque wrench.

Stop drill bit HDA

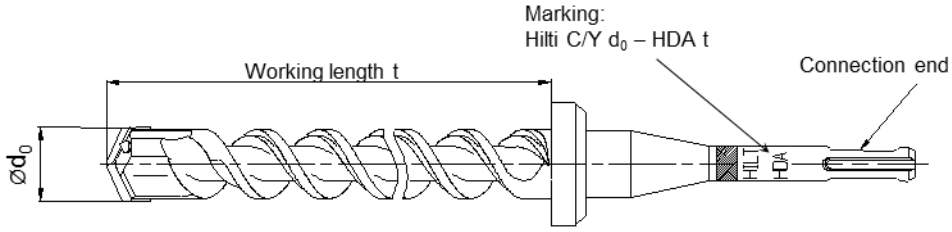

Table 2: Required stop drill bits for HDA and HDA-R

Anchor	**Stop drill bit with**		**Nominal Working length**	**Drill bit diameter**
	TE-C connection end	**TE-Y** connection end	**t** [mm]	**d_0** [mm]
HDA-P(R) 20-M10x100/20	TE-C-HDA-B 20x100	TE-Y-HDA-B 20x100	107	20
HDA-T(R) 20-M10x100/20	TE-C-HDA-B 20x120	TE-Y-HDA-B 20x120	127	20
HDA-P(R) 22-M12x125/30 HDA-P(R) 22-M12x125/50	TE-C HDA-B 22x125	TE-Y HDA-B 22x125	133	22
HDA-T(R) 22-M12x125/30	TE-C HDA-B 22x155	TE-Y HDA-B 22x155	163	22
HDA-T(R) 22-M12x125/50	TE-C HDA-B 22x175	TE-Y HDA-B 22x175	183	22
HDA-P(R) 30-M16x190/40 HDA-P(R) 30-M16x190/60	-	TE-Y HDA-B 30x190	203	30
HDA-T(R) 30-M16x190/40	-	TE-Y HDA-B 30x230	243	30
HDA-T(R) 30-M16x190/60	-	TE-Y HDA-B 30x250	263	30
HDA-P 37-M20x250/50 HDA-P 37-M20x250/100	-	TE-Y HDA-B 37x250	266	37
HDA-T 37-M20x250/50	-	TE-Y HDA-B 37x300	316	37
HDA-T 37-M20x250/100	-	TE-Y HDA-B 37x350	366	37

Setting tool HDA

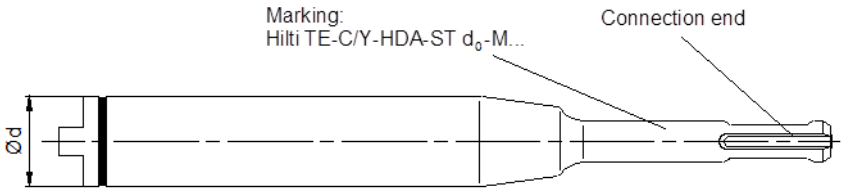

Table 3: Required setting tools and hammer drills for HDA and HDA-R

Anchor 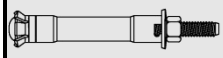	Setting tool			Hammer drill 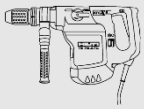											
		Ød [mm]	Connection end	TE 24	TE 25 [1]	TE 30-A36	TE 35	TE 40 TE 40 AVR	TE 56 [2] TE 56-ATC [2]	TE 60 TE 60-ATC	TE 70 [2] TE 70-ATC [2]	TE 75 [2]	TE 76 [2] TE 76-ATC [2]	TE 80 -ATC TE 80-ATC AVR
HDA-P/T 20-M10x100/20	TE-C-HDA-ST 20-M10	20	TE-C	■	■	■		■						
	TE-Y-HDA-ST 20-M10	20	TE-Y						■	■				
HDA-P/T 22-M12x125/30 HDA-P/T 22-M12x125/50	TE-C-HDA-ST 22-M12	22	TE-C	■	■	■		■						
	TE-Y-HDA-ST 22-M12	22	TE-Y						■	■				
HDA-P/T 30-M16x190/40 HDA-P/T 30-M16x190/60	TE-Y-HDA-ST 30-M16	30	TE-Y								■	■	■	■
HDA-P/T 37-M20x250/50 HDA-P/T 37-M20x250/100	TE-Y-HDA-ST 37-M20	37	TE-Y								■		■	■
HDA-PR/TR 20-M10x100/20	TE-C-HDA-ST 20-M10	20	TE-C	■	■	■	■	■						
	TE-Y-HDA-ST 20-M10	20	TE-Y						■	■				
HDA-PR/TR 22-M12x125/30 HDA-PR/TR 22-M12x125/50	TE-C-HDA-ST 22-M12	22	TE-C	■	■	■	■	■						
	TE-Y-HDA-ST 22-M12	22	TE-Y						■	■				
HDA-PR/TR 30-M16x190/40 HDA-PR/TR 30-M16x190/60	TE-Y-HDA-ST 30-M16	30	TE-Y								■	■	■	■

[1] TE25: first gear only.
[2] TE56 / TE56-ATC, TE76 /TE76-ATC: use with max. impact energy.

Instruction for Use: HDA-P and HDA-PR (Prepositioning)

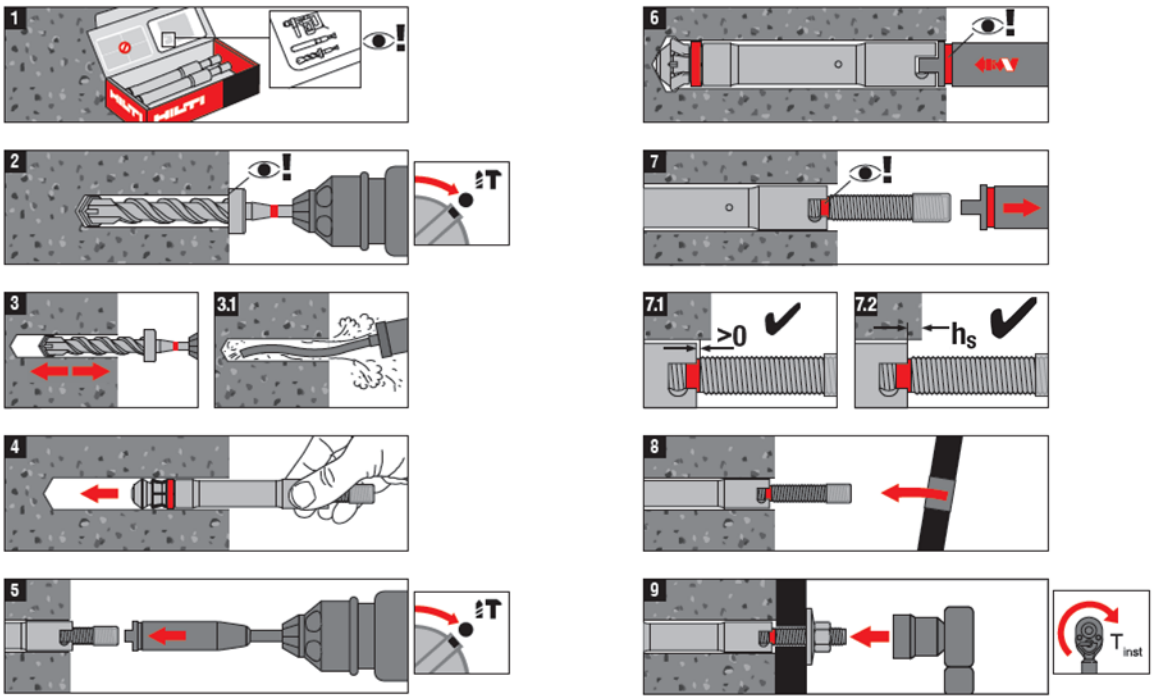

Instruction for Use: HDA-T and HDA-TR (Postpositioning)

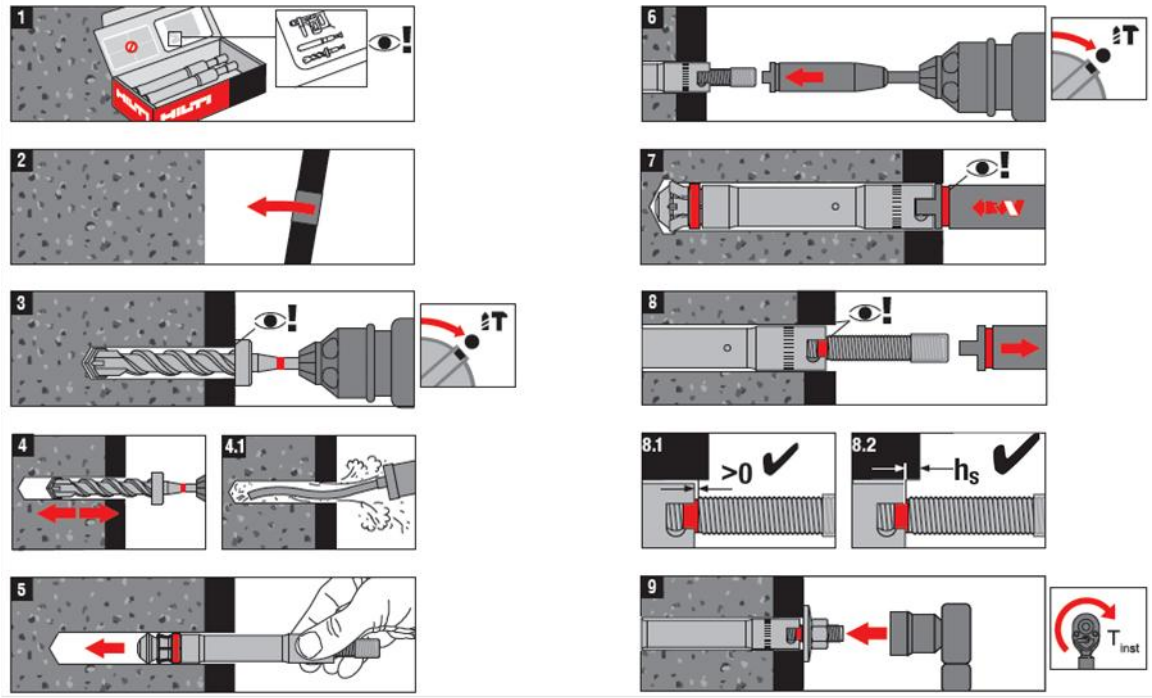

Self-cutting undercut anchor HDA and HDA-R	**Annex B5**
Instruction for use HDA-P, HDA-PR, HDA-T and HDA-TR	

Instruction for Use: HDA-T and HDA-TR with centering washer (Postpositioning)

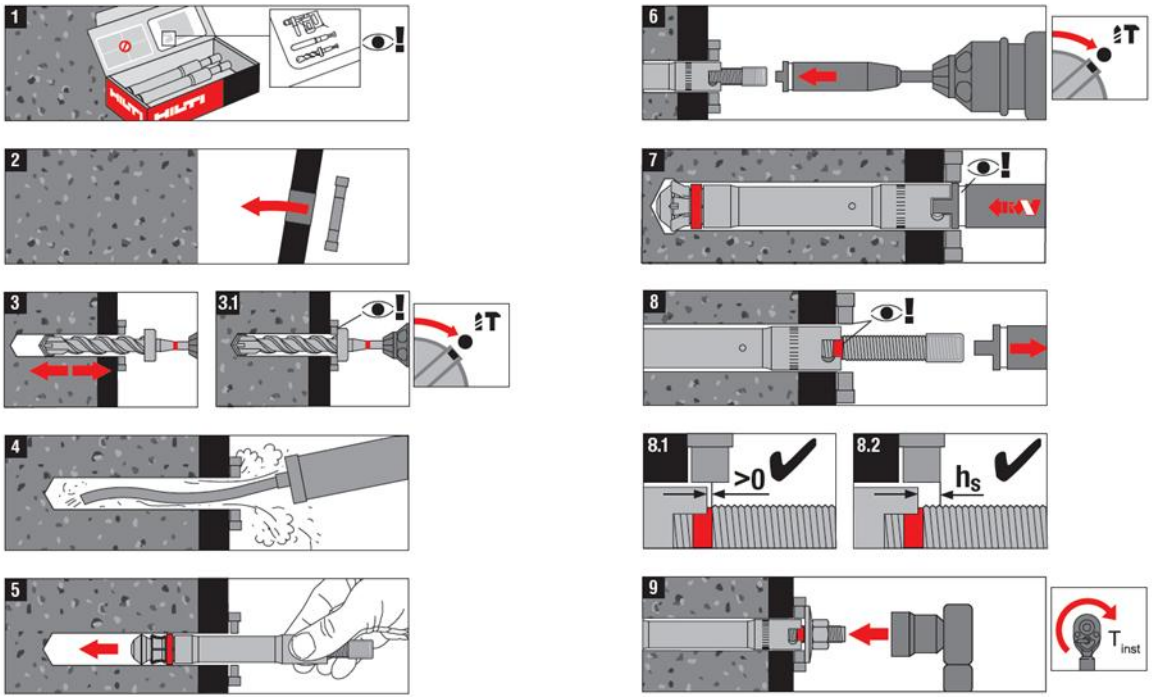

Self-cutting undercut anchor HDA and HDA-R	**Annex B6**
Instruction for use HDA-T and HDA-TR with centering washer	

Pre-setting anchor HDA-P and HDA-PR (Prepositioning)

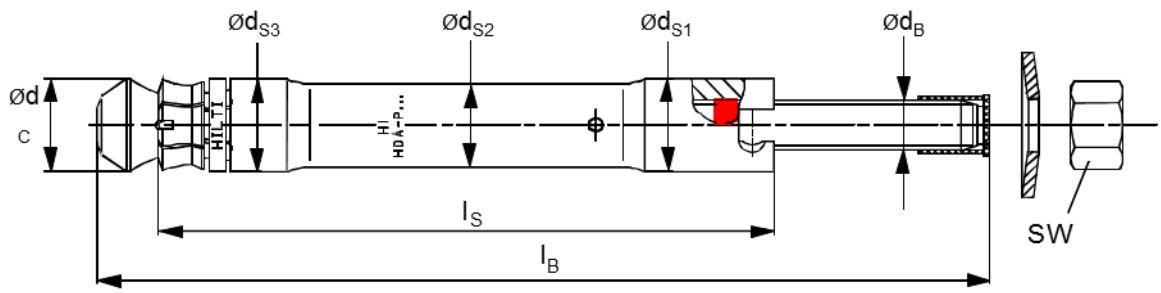

Through-fastening anchor HDA-T and HDA-TR (Postpositioning)

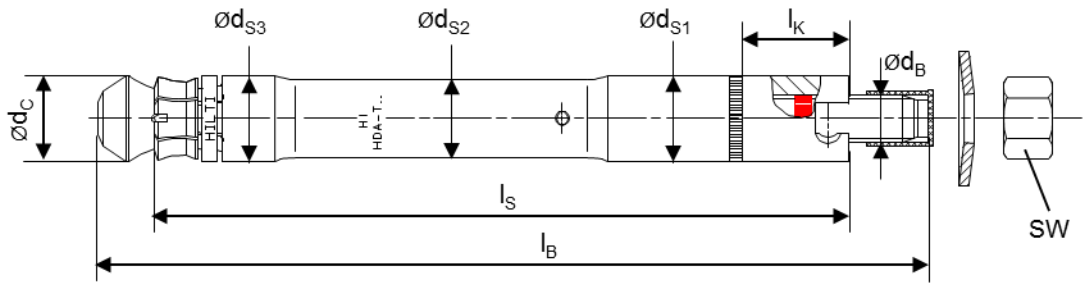

Table 4: Anchor dimensions

Anchor type	t_{fix} [1] min-max [mm]	l_B [mm]	Length code letter	l_S [mm]	l_k [mm]	SW	d_{S1} [mm]	d_{S2} [mm]	d_{S3} [mm]	d_C [mm]	d_B [mm]
HDA-P(R) 20-M10x100/20	0 - 20	150	I	100	-	17	19	16,8	18,5	19,5	10
HDA-T(R) 20-M10x100/20	10 - 20	150	I	120	17	17	19	16,8	18,5	19,5	10
HDA-P(R) 22-M12x125/30	0 - 30	190	L	125	-	19	21	18,8	20,5	21,4	12
HDA-P(R) 22-M12x125/50	0 - 50	210	N	125	-	19	21	18,8	20,5	21,4	12
HDA-T(R) 22-M12x125/30	10 - 30	190	L	155	27	19	21	18,8	20,5	21,4	12
HDA-T(R) 22-M12x125/50	10 - 50	210	N	175	47	19	21	18,8	20,5	21,4	12
HDA-P(R) 30-M16x190/40	0 - 40	275	R	190	-	24	29	26	29	29	16
HDA-P(R) 30-M16x190/60	0 - 60	295	S	190	-	24	29	26	29	29	16
HDA-T(R) 30-M16x190/40	15 - 40	275	R	230	35,5	24	29	26	29	29	16
HDA-T(R) 30-M16x190/60	15 - 60	295	S	250	55,5	24	29	26	29	29	16
HDA-P 37-M20x250/50	0 - 50	360	V	250	-	30	35	32	35	36	20
HDA-P 37-M20x250/100	0 - 100	410	X	250	-	30	35	32	35	36	20
HDA-T 37-M20x250/50	20 - 50	360	V	300	45	30	35	32	35	36	20
HDA-T 37-M20x250/100	50 - 100	410	X	350	95	30	35	32	35	36	20

[1] first value: $t_{fix,min}$ minimum fastenable thickness for pure tension load (shear load see Table 11a, Table 11b, Table 11c and Table 11d)

second value: $t_{fix,max}$ maximum fastenable thickness

Self-cutting undercut anchor HDA and HDA-R

Dimensions of anchor

HDA-P, HDA-PR, HDA-T and HDA-TR

Annex B7

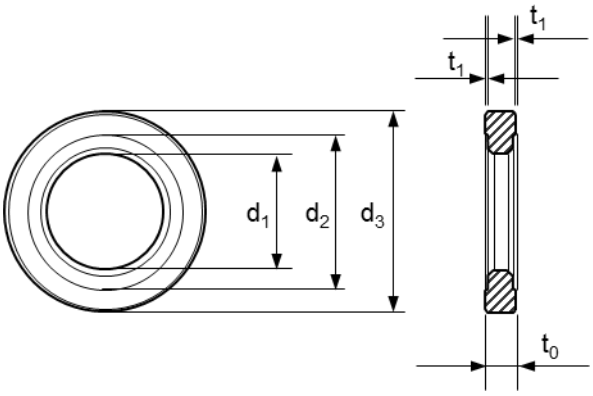

Table 5: Dimensions of centering washer

Centering washer	t_{CW} [1] [mm]	t_0 [mm]	t_1 [mm]	d_1 [mm]	d_2 [mm]	d_3 [mm]	**Anchor type**
HDA-F-CW 5-M10	5	5,5	0,5	21	28	36	HDA-T 20-M10x100/20
HDA-F-CW 5-M12	5	5,5	0,5	23	33	42	HDA-T 22-M12x125/30 HDA-T 22-M12x125/50
HDA-F-CW 5-M16	5	5,5	0,5	32	46	56	HDA-T 30-M16x190/40 HDA-T 30-M16x190/60
HDA-F-CW 5-M20	5	5,5	0,5	40	50	62	HDA-T 37-M20x250/50
HDA-R-CW 5-M10	5	5,5	0,5	21	28	36	HDA-TR 20-M10x100/20
HDA-R-CW 5-M12	5	5,5	0,5	23	33	42	HDA-T 20-M10x100/20 HDA-T 20-M10x100/20
HDA-R-CW 5-M16	5	5,5	0,5	32	46	56	HDA-T 20-M10x100/20 HDA-T 20-M10x100/20

[1] effective thickness of centering washer

Pre-setting anchor
HDA-P (Prepositioning)

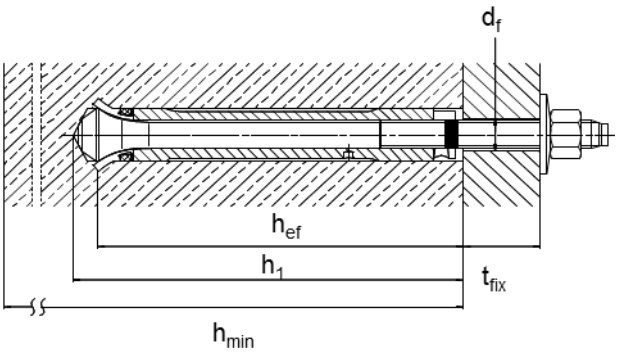

Through-fastening anchor
HDA-T (Postpositioning)

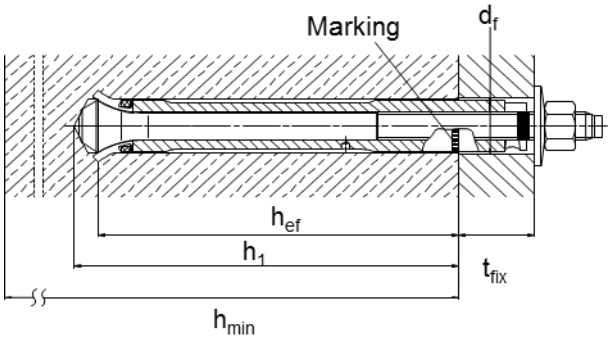

Table 6: Installation data

Anchor type Pre-setting/Through-setting			HDA M10		HDA M12		HDA M16		HDA M20	
			P(R)	T(R)	P(R)	T(R)	P(R)	T(R)	P	T
Nominal diameter of drill bit	d_0	[mm]	20		22		30		37	
Cutting diameter of drill bit	$d_{cut} \leq$	[mm]	20,55		22,55		30,55		37,70	
Depth of drill hole	h_1	[mm]	107	≥107	133	≥133	203	≥203	266	≥266
Diameter of clearance hole in the fixture	d_f	[mm]	12	21	14	23	18	32	22	40
Minimum fixture thickness	$t_{fix,min}$	[mm]	0	10	0	10	0	15	0	20
Sleeve recess[1)]	h_S	[mm]	$2 \leq h_S \leq 6$		$2 \leq h_S \leq 7$		$2 \leq h_S \leq 8$		$2 \leq h_S \leq 8$	
Installation torque	T_{inst}	[Nm]	50		80		120		300	

[1)] sleeve recess after setting of the anchor
a) Pre-setting anchor HDA-P(R):
distance from surface of the concrete member to top edge of the anchor sleeve, see Annex A1
b) Through-fastening anchor HDA-T(R):
distance from top edge of the fixture to top edge of the anchor sleeve, see Annex A2 and Annex A3

Table 7a: Minimum thickness of concrete member, HDA-P and HDA-PR

Anchor type			**HDA-P M10 HDA-PR M10**	**HDA-P M12 HDA-PR M12**	**HDA-P M16 HDA-PR M16**	**HDA-P M20 HDA-PR M20**
Minimum thickness of concrete member	h_{min}	[mm]	180	200	270	350

Table 7b: Minimum thickness of concrete member, HDA-T and HDA-TR

Anchor type			**HDA-T M10 HDA-TR M10**	**HDA-T M12 HDA-TR M12**		**HDA-T M16 HDA-TR M16**		**HDA-T M20**	
Maximum fastenable thickness	$t_{fix,max}$ [1)]	[mm]	20	30	50	40	60	50	100
Minimum thickness of concrete member	h_{min} [2)]	[mm]	$200-t_{fix}$	$230-t_{fix}$	$250-t_{fix}$	$310-t_{fix}$	$330-t_{fix}$	$400-t_{fix}$	$450-t_{fix}$

[1)] $t_{fix,max}$ maximum fastenable thickness, see Table 4, Annex B7

[2)] h_{min} is dependent on the actual fixture thickness t_{fix} (use of a stop drill bit)

e.g. HDA-T 22-M12x125/50: t_{fix} = 20mm → h_{min} = 250-20 = 230mm

t_{fix} = 50mm → h_{min} = 250-50 = 200mm

Table 8: Minimum spacing and minimum edge distances of anchors

HDA-P(R) / HDA-T(R)			**M10**	**M12**	**M16**	**M20**
Cracked concrete						
Minimum spacing [1)]	s_{min}	[mm]	100	125	190	250
Minimum edge distance [2)]	c_{min}	[mm]	80	100	150	200
Non-cracked concrete						
Minimum spacing [1)]	s_{min}	[mm]	100	125	190	250
Minimum edge distance [2)]	c_{min}	[mm]	80	100	150	200

[1)] ratio s_{min} / h_{ef} = 1,0

[2)] ratio c_{min} / h_{ef} = 0,8

Table 9a: Characteristic values of resistance under tension loads in case of static and quasi-static loading for design method A acc. to ETAG001, Annex C, HDA-P and HDA-T

HDA-P / HDA-T			**M10**	**M12**	**M16**	**M20**
Steel failure						
Characteristic resistance	$N_{Rk,s}$	[kN]	**46**	**67**	**126**	**192**
Partial safety factor	γ_{Ms} [1)]		1,5			
Pull-out failure [2)]						
Characteristic resistance in cracked concrete only C20/25	$N_{Rk,p}$	[kN]	**25**	**35**	**75**	**95**
Partial safety factor in cracked concrete only	γ_{Mp} [1)]		1,5 [3)]			
Increasing factors for $N_{Rk,p}$ for cracked concrete only	ψ_c	C30/37	1,22			
		C40/50	1,41			
		C50/60	1,55			
Concrete cone failure and splitting failure [4)]						
Effective anchorage depth	h_{ef}	[mm]	100	125	190	250
Partial safety factor in cracked and non-cracked concrete	γ_{Mc} [1)]		1,5 [3)]			
Spacing	$s_{cr,N}$	[mm]	300	375	570	750
Edge distance	$c_{cr,N}$	[mm]	150	190	285	375
Spacing	$s_{cr,sp}$	[mm]	300	375	570	750
Edge distance	$c_{cr,sp}$	[mm]	150	190	285	375

1) In absence of national regulations.

2) The pull-out failure mode is not decisive in non-cracked concrete; it does not have to be calculated by the designer.

3) Partial safety factor γ_2 = 1,0 is included.

4) For concrete cone failure, the initial value of the characteristic resistance of an HDA anchor placed in cracked or non-cracked concrete is obtained by: $N^0_{Rk,c} = k_1 \cdot \sqrt{f_{ck,cube}} \cdot h_{ef}^{1,5}$

with k_1 = 8,3 for applications in cracked concrete
k_1 = 11,6 for applications in non-cracked concrete

instead of the factors k_1 given in equation (5.2a) in ETAG 001 Annex C, § 5.2.2.4.

Table 9b: Characteristic values of resistance under tension loads in case of static and quasi-static loading for design method A acc. to ETAG001, Annex C, HDA-PR and HDA-TR

HDA-PR / HDA-TR			**M10**	**M12**	**M16**
Steel failure					
Characteristic resistance	$N_{Rk,s}$	[kN]	**46**	**67**	**126**
Partial safety factor	γ_{Ms} [1)]		1,6		
Pull-out failure[2)]					
Characteristic resistance in cracked concrete only C20/25	$N_{Rk,p}$	[kN]	**25**	**35**	**75**
Partial safety factor in cracked concrete only	γ_{Mp} [1)]		1,5 [3)]		
Increasing factors for $N_{Rk,p}$ for cracked concrete only	ψ_c	C30/37	1,22		
		C40/50	1,41		
		C50/60	1,55		
Concrete cone failure and splitting failure[4)]					
Effective anchorage depth	h_{ef}	[mm]	100	125	190
Partial safety factor in cracked and non-cracked concrete	γ_{Mc} [1)]		1,5 [3)]		
Spacing	$s_{cr,N}$	[mm]	300	375	570
Edge distance	$c_{cr,N}$	[mm]	150	190	285
Spacing	$s_{cr,sp}$	[mm]	300	375	570
Edge distance	$c_{cr,sp}$	[mm]	150	190	285

[1)] In absence of national regulations.

[2)] The pull-out failure mode is not decisive in non-cracked concrete; it does not have to be calculated by the designer.

[3)] Partial safety factor γ_2 = 1,0 is included.

[4)] For concrete cone failure, the initial value of the characteristic resistance of an HDA anchor placed in cracked or non-cracked concrete is obtained by: $N^0_{Rk,c} = k_1 \cdot \sqrt{f_{ck,cube}} \cdot h_{ef}^{1,5}$

with k_1 = 8,3 for applications in cracked concrete
k_1 = 11,6 for applications in non-cracked concrete

instead of the factors k_1 given in equation (5.2a) in ETAG 001 Annex C, § 5.2.2.4.

Table 9c: Characteristic values of resistance under tension loads in case of static and quasi-static loading for design method A acc. to CEN/TS 1992-4, HDA-P and HDA-T

HDA-P / HDA-T			**M10**	**M12**	**M16**	**M20**
Steel failure						
Characteristic resistance	$N_{Rk,s}$	[kN]	**46**	**67**	**126**	**192**
Partial safety factor	γ_{Ms} [1)]		1,5			
Pull-out failure [2)]						
Characteristic resistance in cracked concrete only C20/25	$N_{Rk,p}$	[kN]	**25**	**35**	**75**	**95**
Partial safety factor in cracked concrete only	γ_{Mp} [1)]		1,5 [3)]			
Increasing factors for $N_{Rk,p}$ for cracked concrete only	ψ_c	C30/37	1,22			
		C40/50	1,41			
		C50/60	1,55			
Concrete cone failure and splitting failure						
Effective anchorage depth	h_{ef}	[mm]	100	125	190	250
Factor for applications in cracked concrete	k_{cr}	[-]	8,3			
Factor for applications in non-cracked concrete	k_{ucr}	[-]	11,6			
Partial safety factor in cracked and non-cracked concrete	γ_{Mc} [1)]		1,5 [3)]			
Spacing	$s_{cr,N}$	[mm]	300	375	570	750
Edge distance	$c_{cr,N}$	[mm]	150	190	285	375
Spacing	$s_{cr,sp}$	[mm]	300	375	570	750
Edge distance	$c_{cr,sp}$	[mm]	150	190	285	375

[1)] In absence of national regulations.

[2)] The pull-out failure mode is not decisive in non-cracked concrete; it does not have to be calculated by the designer.

[3)] Partial safety factor γ_2 = 1,0 is included.

Table 9d: Characteristic values of resistance under tension loads in case of static and quasi-static loading for design method A acc. to CEN/TS 1992-4, HDA-PR and HDA-TR

HDA-PR / HDA-TR			**M10**	**M12**	**M16**
Steel failure					
Characteristic resistance	$N_{Rk,s}$	[kN]	**46**	**67**	**126**
Partial safety factor	γ_{Ms} [1)]		1,6		
Pull-out failure [2)]					
Characteristic resistance in cracked concrete only C20/25	$N_{Rk,p}$	[kN]	**25**	**35**	**75**
Partial safety factor in cracked concrete only	γ_{Mp} [1)]		1,5 [3)]		
Increasing factors for $N_{Rk,p}$ for cracked concrete only	ψ_c	C30/37	1,22		
		C40/50	1,41		
		C50/60	1,55		
Concrete cone failure and splitting failure					
Effective anchorage depth	h_{ef}	[mm]	100	125	190
Factor for applications in cracked concrete	k_{cr}	[-]	8,3		
Factor for applications in non-cracked concrete	k_{ucr}	[-]	11,6		
Partial safety factor in cracked and non-cracked concrete	γ_{Mc} [1)]		1,5 [3)]		
Spacing	$s_{cr,N}$	[mm]	300	375	570
Edge distance	$c_{cr,N}$	[mm]	150	190	285
Spacing	$s_{cr,sp}$	[mm]	300	375	570
Edge distance	$c_{cr,sp}$	[mm]	150	190	285

[1)] In absence of national regulations.

[2)] The pull-out failure mode is not decisive in non-cracked concrete; it does not have to be calculated by the designer.

[3)] Partial safety factor γ_2 = 1,0 is included.

Table 10a: Displacements under tension loads in case of static and quasi-static loading HDA-P and HDA-T

HDA-P / HDA-T			**M10**	**M12**	**M16**	**M20**
Tension load in C20/25 to C50/60 cracked concrete		[kN]	**11,9**	**16,7**	**35,7**	**45,2**
Displacement [1)]	δ_{N0}	[mm]	0,1	0,8	2,1	2,1
	$\delta_{N\infty}$	[mm]	1,3	1,3	2,1	2,1
Tension load in C20/25 to C50/60 non-cracked concrete		[kN]	**21,9**	**31,9**	**60,0**	**91,4**
Displacement [1)]	δ_{N0}	[mm]	0,4	0,8	1,7	2,4
	$\delta_{N\infty}$	[mm]	1,3	1,3	1,7	2,4

[1)] Calculation of displacement under service load: N_{sd} design value of tension stress
Displacement under short term loading = $\delta_{N0} \cdot N_{sd}/1,4$;
Displacement under long term loading = $\delta_{N\infty} \cdot N_{sd}/1,4$

Table 10b: Displacements under tension loads in case of static and quasi-static loading HDA-PR and HDA-TR

HDA-PR / HDA-TR			**M10**	**M12**	**M16**
Tension load in C20/25 to C50/60 cracked concrete		[kN]	**11,9**	**16,7**	**35,7**
Displacement [1)]	δ_{N0}	[mm]	0,8	0,9	1,6
	$\delta_{N\infty}$	[mm]	1,3	1,3	2,1
Tension load in C20/25 to C50/60 non-cracked concrete		[kN]	**20,5**	**29,9**	**56,3**
Displacement [1)]	δ_{N0}	[mm]	1,4	1,1	1,7
	$\delta_{N\infty}$	[mm]	1,4	1,1	1,7

[1)] Calculation of displacement under service load: N_{sd} design value of tension stress
Displacement under short term loading = $\delta_{N0} \cdot N_{sd}/1,4$;
Displacement under long term loading = $\delta_{N\infty} \cdot N_{sd}/1,4$

Table 11a: Characteristic values of resistance under shear loads in case of static and quasi-static loading for design method A acc. to ETAG001, Annex C, HDA-P and HDA-T

HDA-P			**M10**	**M12**	**M16**	**M20**
Steel failure without lever arm						
Characteristic resistance	$V_{Rk,s}$	[kN]	**22**	**30**	**62**	**92**
Partial safety factor	γ_{Ms} [1)]		1,25			
Steel failure with lever arm						
Distance according ETAG 001, Annex C, § 4.2.2.4	a_3	[mm]	8	10	13	15
Characteristic resistance	$M^0_{Rk,s}$	[Nm]	**60**	**105**	**266**	**519**
Partial safety factor	γ_{Ms} [1)]		1,25			

HDA-T			**M10**		**M12**			**M16**					**M20**			
Steel failure without lever arm																
Characteristic resistance	for t_{fix}	[mm]	10 ≤ < 15	15 ≤ ≤ 20	10 ≤ < 15	15 ≤ < 20	20 ≤ ≤ 50	15 ≤ < 20	20 ≤ < 25	25 ≤ < 30	30 ≤ < 35	35 ≤ ≤ 60	20 ≤ < 25	25 ≤ < 40	40 ≤ < 55	55 ≤ ≤100
	$V_{Rk,s}$	[kN]	**65** [2)]	**70**	**80** [2)]	**80**	**100**	**140** [2)]	**140**	**155**	**170**	**190**	**205** [2)]	**205**	**235**	**250**
Partial safety factor	γ_{Ms} [1)]		1,5													
Steel failure with lever arm																
Characteristic resistance	$M^0_{Rk,s}$	[Nm]	**60**		**105**			**266**					**519**			
Partial safety factor	γ_{Ms} [1)]		1,25													

HDA-P / HDA-T			**M10**	**M12**	**M16**	**M20**
Concrete pryout failure						
Factor in equation (5.6) according ETAG 001, Annex C, § 5.2.3.3.	k		2,0			
Partial safety factor	γ_{Mc} [1)]		1,5 [3)]			
Concrete edge failure						
Effective length of anchor in shear loading	l_f	[mm]	70	88	90	120
External diameter of anchor	d_{nom}	[mm]	19	21	29	35
Partial safety factor	γ_{Mc} [1)]		1,5 [3)]			

[1)] In absence of national regulations.

[2)] only with use of centering washer, t_{fix} = thickness of the base plate without thickness of the centering washer, see Annex B8.

[3)] Partial safety factor γ_2 = 1,0 is included.

Table 11b: Characteristic values of resistance under shear loads in case of static and quasi-static loading for design method A acc. to ETAG001, Annex C, HDA-PR and HDA-TR

HDA-PR			**M10**		**M12**			**M16**			
Steel failure without lever arm											
Characteristic resistance	$V_{Rk,s}$	[kN]	**23**		**34**			**63**			
Partial safety factor	γ_{Ms} [1)]		1,33								
Steel failure with lever arm											
Distance according ETAG 001, Annex C, § 4.2.2.4	a_3	[mm]	8		10			13			
Characteristic resistance	$M^0_{Rk,s}$	[Nm]	**60**		**105**			**266**			
Partial safety factor	γ_{Ms} [1)]		1,33								
HDA-TR			**M10**		**M12**			**M16**			
Steel failure without lever arm											
Characteristic resistance	for t_{fix}	[mm]	10 ≤ < 15	15 ≤ ≤ 20	10 ≤ < 15	15 ≤ < 20	20 ≤ < 30	30 ≤ ≤ 50	15 ≤ < 20	20 ≤ < 25	25 ≤ < 35	35≤ ≤ 60
	$V_{Rk,s}$	[kN]	**71** [2)]	**71**	**87** [2)]	**87**	**94**	**109**	**152** [2)]	**152**	**158**	**170**
Partial safety factor	γ_{Ms} [1)]		1,33									
Steel failure with lever arm											
Characteristic resistance	$M^0_{Rk,s}$	[Nm]	**60**		**105**			**266**			
Partial safety factor	γ_{Ms} [1)]		1,33								
HDA-PR / HDA-TR			**M10**		**M12**			**M16**			
Concrete pryout failure											
Factor in equation (5.6) according ETAG 001, Annex C, § 5.2.3.3.	k		2,0								
Partial safety factor	γ_{Mc} [1)]		1,5 [3)]								
Concrete edge failure											
Effective length of anchor in shear loading	l_f	[mm]	70		88			90			
External diameter of anchor	d_{nom}	[mm]	19		21			29			
Partial safety factor	γ_{Mc} [1)]		1,5 [3)]								

[1)] In absence of national regulations.

[2)] only with use of centering washer, t_{fix} = thickness of the base plate without thickness of the centering washer, see Annex B8.

[3)] Partial safety factor γ_2 = 1,0 is included.

Table 11c: Characteristic values of resistance under shear loads in case of static and quasi-static loading for design method A acc. to CEN/TS 1992-4, HDA-P and HDA-T

HDA-P		**M10**	**M12**	**M16**	**M20**
Steel failure without lever arm					
Characteristic resistance	$V_{Rk,s}$ [kN]	**22**	**30**	**62**	**92**
Factor for non-ductile steel	k_2	1,0			
Partial safety factor	γ_{Ms} [1)]	1,25			
Steel failure with lever arm					
Distance according CEN/TS 1992-4-1, § 5.2.3.4	a_3 [mm]	8	10	13	15
Characteristic resistance	$M^0_{Rk,s}$ [Nm]	**60**	**105**	**266**	**519**
Partial safety factor	γ_{Ms} [1)]	1,25			

HDA-T		**M10**		**M12**			**M16**					**M20**			
Steel failure without lever arm															
Characteristic resistance	for t_{fix} [mm]	10 ≤ < 15	15 ≤ ≤ 20	10 ≤ < 15	15 ≤ < 20	20 ≤ ≤ 50	15 ≤ < 20	20 ≤ < 25	25 ≤ < 30	30 ≤ < 35	35 ≤ ≤ 60	20 ≤ < 25	25 ≤ < 40	40 ≤ < 55	55 ≤ ≤100
	$V_{Rk,s}$ [kN]	**65** [2)]	**70**	**80** [2)]	**80**	**100**	**140** [2)]	**140**	**155**	**170**	**190**	**205** [2)]	**205**	**235**	**250**
Factor for non-ductile steel	k_2	1,0													
Partial safety factor	γ_{Ms} [1)]	1,5													
Steel failure with lever arm															
Characteristic resistance	$M^0_{Rk,s}$ [Nm]	**60**		**105**			**266**					**519**			
Partial safety factor	γ_{Ms} [1)]	1,25													

HDA-P / HDA-T		**M10**	**M12**	**M16**	**M20**
Concrete pryout failure					
Factor in eq. (16) acc. CEN/TS 1992-4-4, § 6.2.2.3.	k_3	2,0			
Partial safety factor	γ_{Mcp} [1)]	1,5 [3)]			
Concrete edge failure					
Effective length of anchor in shear loading	l_f [mm]	70	88	90	120
External diameter of anchor	d_{nom} [mm]	19	21	29	35
Partial safety factor	γ_{Mc} [1)]	1,5 [3)]			

[1)] In absence of national regulations.

[2)] only with use of centering washer, t_{fix} = thickness of the base plate without thickness of the centering washer, see Annex B8.

[3)] Partial safety factor γ_2 = 1,0 is included.

Self-cutting undercut anchor HDA and HDA-R

Design method A (CEN/TS 1992-4) - shear loads

HDA-P and HDA-T

Annex C8

Table 11d: Characteristic values of resistance under shear loads in case of static and quasi-static loading for design method A acc. to CEN/TS 1992-4, HDA-PR and HDA-TR

HDA-PR		**M10**	**M12**	**M16**
Steel failure without lever arm				
Characteristic resistance	$V_{Rk,s}$ [kN]	**23**	**34**	**63**
Factor for non-ductile steel	k_2	1,0		
Partial safety factor	γ_{Ms} [1)]	1,33		
Steel failure with lever arm				
Distance according CEN/TS 1992-4-1, § 5.2.3.4	a_3 [mm]	8	10	13
Characteristic resistance	$M^0_{Rk,s}$ [Nm]	**60**	**105**	**266**
Partial safety factor	γ_{Ms} [1)]	1,33		

HDA-TR		**M10**		**M12**				**M16**			
Steel failure without lever arm											
Characteristic resistance	for t_{fix} [mm]	10 ≤ < 15	15 ≤ ≤ 20	10 ≤ < 15	15 ≤ < 20	20 ≤ < 30	30 ≤ ≤ 50	15 ≤ < 20	20 ≤ < 25	25 ≤ < 35	35≤ ≤ 60
	$V_{Rk,s}$ [kN]	**71** [2)]	**71**	**87** [2)]	**87**	**94**	**109**	**152** [2)]	**152**	**158**	**170**
Factor for non-ductile steel	k_2	1,0									
Partial safety factor	γ_{Ms} [1)]	1,33									
Steel failure with lever arm											
Characteristic resistance	$M^0_{Rk,s}$ [Nm]	**60**		**105**				**266**			
Partial safety factor	γ_{Ms} [1)]	1,33									

HDA-PR / HDA-TR		**M10**	**M12**	**M16**
Concrete pryout failure				
Factor in eq. (16) acc. CEN/TS 1992-4-4, § 6.2.2.3.	k_3	2,0		
Partial safety factor	γ_{Mcp} [1)]	1,5 [3)]		
Concrete edge failure				
Effective length of anchor in shear loading	l_f [mm]	70	88	90
External diameter of anchor	d_{nom} [mm]	19	21	29
Partial safety factor	γ_{Mc} [1)]	1,5 [3)]		

[1)] In absence of national regulations.

[2)] only with use of centering washer, t_{fix} = thickness of the base plate without thickness of the centering washer, see Annex B8.

[3)] Partial safety factor γ_2 = 1,0 is included.

Table 12a: Displacements under shear loads in case of static and quasi-static loading HDA-P and HDA-T

HDA-P			**M10**	**M12**	**M16**	**M20**
Shear load in C20/25 to C50/60 cracked and non-cracked concrete		[kN]	11,4	17,1	35,9	51
Displacement	δ_{V0}	[mm]	2,8	2,5	4,1	5,0
	$\delta_{V\infty}$	[mm]	4,1	3,8	6,2	7,5
HDA-T			**M10**	**M12**	**M16**	**M20**
Shear load in C20/25 to C50/60 cracked and non-cracked concrete		[kN]	33,3	42,8	95,2	119
Displacement	δ_{V0}	[mm]	6,2	6,9	10,1	12,0
	$\delta_{V\infty}$	[mm]	9,3	10,3	15,1	18,0

[1)] Calculation of displacement under service load: V_{sd} design value of shear stress
Displacement under short term loading = $\delta_{V0} \cdot V_{sd}/1,4$;
Displacement under long term loading = $\delta_{V\infty} \cdot V_{sd}/1,4$

Table 12b: Displacements under shear loads in case of static and quasi-static loading HDA-PR and HDA-TR

HDA-PR			**M10**	**M12**	**M16**
Shear load in C20/25 to C50/60 cracked and non-cracked concrete		[kN]	13,3	19,3	35,9
Displacement	δ_{V0}	[mm]	4,2	3,0	6,9
	$\delta_{V\infty}$	[mm]	6,3	4,5	10,4
HDA-TR			**M10**	**M12**	**M16**
Shear load in C20/25 to C50/60 cracked and non-cracked concrete		[kN]	41,7	46,9	73,7
Displacement	δ_{V0}	[mm]	4,2	3,0	6,9
	$\delta_{V\infty}$	[mm]	6,3	4,5	10,4

[1)] Calculation of displacement under service load: V_{sd} design value of shear stress
Displacement under short term loading = $\delta_{V0} \cdot V_{sd}/1,4$;
Displacement under long term loading = $\delta_{V\infty} \cdot V_{sd}/1,4$

Table 13a: Characteristic values of resistance under tension loads in case of seismic performance category C1 for design acc. to EOTA TR045, HDA-P and HDA-T

HDA-P / HDA-T			**M10**	**M12**	**M16**	**M20**
Steel failure						
Characteristic resistance	$N_{Rk,s,seis}$	[kN]	**46**	**67**	**126**	**192**
Partial safety factor	$\gamma_{Ms,seis}$ [1)]		1,5			
Pull-out failure						
Characteristic resistance in cracked concrete only C20/25	$N_{Rk,p,seis}$	[kN]	$N_{Rk,c}$			
Partial safety factor	$\gamma_{Mp,seis}$ [1)]		1,5 [2)]			
Concrete cone failure [3)]						
Partial safety factor	$\gamma_{Mc,seis}$ [1)]		1,5 [2)]			
Splitting failure [3)]						
Partial safety factor	$\gamma_{MSp,seis}$ [1)]		1,5 [2)]			

[1)] In absence of other national regulations.

[2)] The partial safety factor γ_2 = 1.0 is included.

[3)] For concrete cone failure and splitting failure see Annex C20.

Table 14a: Displacements under tension loads in case of seismic performance category C1[1)], HDA-P and HDA-T

HDA-P / HDA-T			**M10**	**M12**	**M16**	**M20**
Displacement	$\delta_{N,seis}$	[mm]	**3,1**	**1,3**	**1,9**	**2,0**

[1)] Maximum displacement during cycling (seismic event)

The definition of seismic performance category C1 is given in Annex C19.

Table 13b: Characteristic values of resistance under tension loads in case of seismic performance category C1 for design acc. to EOTA TR045, HDA-PR and HDA-TR

HDA-PR / HDA-TR			**M10**	**M12**	**M16**
Steel failure					
Characteristic resistance	$N_{Rk,s,seis}$	[kN]	**46**	**67**	**126**
Partial safety factor	$\gamma_{Ms,seis}$ [1)]		1,6		
Pull-out failure					
Characteristic resistance in cracked concrete only C20/25	$N_{Rk,p,seis}$	[kN]	$N_{Rk,c}$		
Partial safety factor	$\gamma_{Mp,seis}$ [1)]		1,5 [2)]		
Concrete cone failure [3)]					
Partial safety factor	$\gamma_{Mc,seis}$ [1)]		1,5 [2)]		
Splitting failure [3)]					
Partial safety factor	$\gamma_{MSp,seis}$ [1)]		1,5 [2)]		

[1)] In absence of other national regulations.

[2)] The partial safety factor γ_2 = 1.0 is included.

[3)] For concrete cone failure and splitting failure see Annex C20.

Table 14b: Displacements under tension loads in case of seismic performance category C1[1)], HDA-PR and HDA-TR

HDA-PR / HDA-TR			**M10**	**M12**	**M16**
Displacement	$\delta_{N,seis}$	[mm]	**3,1**	**1,3**	**1,9**

[1)] Maximum displacement during cycling (seismic event)

The definition of seismic performance category C1 is given in Annex C19.

Table 15a: Characteristic values of resistance under shear loads in case of seismic performance category C1 for design acc. to EOTA TR045, HDA-P and HDA-T

HDA-P		**M10**		**M12**			**M16**					**M20**			
Steel failure															
Characteristic resistance	$V_{Rk,s,seis}$ [kN]	**22**		**30**			**62**					**92**			
Partial safety factor	$\gamma_{Ms,seis}$ [1)]	1,25													
HDA-T		**M10**		**M12**			**M16**					**M20**			
Steel failure															
Characteristic resistance	for t_{fix} [mm]	10 ≤	15 ≤	10 ≤	15 ≤	20 ≤	15 ≤	20 ≤	25 ≤	30 ≤	35 ≤	20 ≤	25 ≤	40 ≤	55 ≤
		< 15	≤ 20	< 15	< 20	≤ 50	< 20	< 25	< 30	< 35	≤ 60	< 25	< 40	< 55	≤100
	$V_{Rk,s,seis}$ [kN]	**65** [2)]	**70**	**80** [2)]	**80**	**100**	**140** [2)]	**140**	**155**	**170**	**190**	**205** [2)]	**205**	**235**	**250**
Partial safety factor	$\gamma_{Ms,seis}$ [1)]	1,5													
HDA-P / HDA-T		**M10**		**M12**			**M16**					**M20**			
Concrete pryout failure [4)]															
Partial safety factor	$\gamma_{Mcp,seis}$ [1)]	1,5 [3)]													
Concrete edge failure [4)]															
Partial safety factor	$\gamma_{Mc,seis}$ [1)]	1,5 [3)]													

[1)] In absence of other national regulations.

[2)] only with use of centering washer, t_{fix} = thickness of the base plate without thickness of the centering washer, see Annex B8.

[3)] The partial safety factor γ_2 = 1.0 is included.

[4)] For concrete pryout failure and concrete edge failure see Annex C20.

Table 16a: Displacements under shear loads in case of seismic performance category C1[1)], HDA-P and HDA-T

HDA-P / HDA-T		**M10**	**M12**	**M16**	**M20**
Displacement HDA-P	$\delta_{V,seis}$ [mm]	**3,0**	**2,6**	**4,2**	**4,8**
Displacement HDA-T	$\delta_{V,seis}$ [mm]	**3,0**	**2,6**	**4,2**	**4,8**

[1)] Maximum displacement during cycling (seismic event)

The definition of seismic performance category C1 is given in Annex C19.

Table 15b: Characteristic values of resistance under shear loads in case of seismic performance category C1 for design acc. to EOTA TR045, HDA-PR and HDA-TR

HDA-PR		**M10**		**M12**				**M16**			
Steel failure											
Characteristic resistance	$V_{Rk,s,seis}$ [kN]	**23**		**34**				**63**			
Partial safety factor	$\gamma_{Ms,seis}$ [1)]	1,33									
HDA-TR		**M10**		**M12**				**M16**			
Steel failure											
Characteristic resistance	for t_{fix} [mm]	10 ≤ < 15	15 ≤ ≤ 20	10 ≤ < 15	15 ≤ < 20	20 ≤ < 30	30 ≤ ≤ 50	15 ≤ < 20	20 ≤ < 25	25 ≤ < 35	35 ≤ ≤ 60
	$V_{Rk,s,seis}$ [kN]	**71** [2)]	**71**	**87** [2)]	**87**	**94**	**109**	**152** [2)]	**152**	**158**	**170**
Partial safety factor	$\gamma_{Ms,seis}$ [1)]	1,33									
HDA-PR / HDA-TR		**M10**		**M12**				**M16**			
Concrete pryout failure [4)]											
Partial safety factor	$\gamma_{Mcp,seis}$ [1)]	1,5 [3)]									
Concrete edge failure [4)]											
Partial safety factor	$\gamma_{Mc,seis}$ [1)]	1,5 [3)]									

[1)] In absence of other national regulations.

[2)] only with use of centering washer, t_{fix} = thickness of the base plate without thickness of the centering washer, see Annex B8.

[3)] The partial safety factor γ_2 = 1.0 is included.

[4)] For concrete pryout failure and concrete edge failure see Annex C20.

Table 16b: Displacements under shear loads in case of seismic performance category C1[1)], HDA-PR and HDA-TR

HDA-PR / HDA-TR		**M10**	**M12**	**M16**
Displacement HDA-PR	$\delta_{V,seis}$ [mm]	**3,0**	**2,6**	**4,2**
Displacement HDA-TR	$\delta_{V,seis}$ [mm]	**3,0**	**2,6**	**4,2**

[1)] Maximum displacement during cycling (seismic event)

The definition of seismic performance category C1 is given in Annex C19.

Table 17a: Characteristic values of resistance under tension loads in case of seismic performance category C2 for design acc. to EOTA TR045, HDA-P and HDA-T

HDA-P / HDA-T			**M10**	**M12**	**M16**	**M20**
Steel failure						
Characteristic resistance	$N_{Rk,s,seis}$	[kN]	**46**	**67**	**126**	**192**
Partial safety factor	$\gamma_{Ms,seis}$ [1)]		1,5			
Pull-out failure						
Characteristic resistance in cracked concrete only C20/25	$N_{Rk,p,seis}$	[kN]	**25**	**35**	**75**	**95**
Partial safety factor	$\gamma_{Mp,seis}$ [1)]		1,5 [2)]			
Concrete cone failure [3)]						
Partial safety factor	$\gamma_{Mc,seis}$ [1)]		1,5 [2)]			
Splitting failure [3)]						
Partial safety factor	$\gamma_{MSp,seis}$ [1)]		1,5 [2)]			

[1)] In absence of other national regulations.

[2)] The partial safety factor γ_2 = 1.0 is included.

[3)] For concrete cone failure and splitting failure see Annex C20.

Table 18a: Displacements under tension loads in case of seismic performance category C2, HDA-P and HDA-T

HDA-P / HDA-T			**M10**	**M12**	**M16**	**M20**
Displacement DLS	$\delta_{N,seis(DLS)}$	[mm]	**4,6**	**3,2**	**3,3**	**1,7**
Displacement ULS	$\delta_{N,seis(ULS)}$	[mm]	**11,4**	**8,3**	**8,1**	**6,7**

The definition of seismic performance category C2 is given in Annex C19.

Table 17b: Characteristic values of resistance under tension loads in case of seismic performance category C2 for design acc. to EOTA TR045, HDA-PR and HDA-TR

HDA-PR / HDA-TR			**M10**	**M12**	**M16**
Steel failure					
Characteristic resistance	$N_{Rk,s,seis}$	[kN]	**46**	**67**	**126**
Partial safety factor	$\gamma_{Ms,seis}$ [1)]		1,6		
Pull-out failure					
Characteristic resistance in cracked concrete only C20/25	$N_{Rk,p,seis}$	[kN]	**25**	**35**	**75**
Partial safety factor	$\gamma_{Mp,seis}$ [1)]		1,5 [2)]		
Concrete cone failure [3)]					
Partial safety factor	$\gamma_{Mc,seis}$ [1)]		1,5 [2)]		
Splitting failure [3)]					
Partial safety factor	$\gamma_{MSp,seis}$ [1)]		1,5 [2)]		

[1)] In absence of other national regulations.

[2)] The partial safety factor γ_2 = 1.0 is included.

[3)] For concrete cone failure and splitting failure see Annex C20.

Table 18b: Displacements under tension loads in case of seismic performance category C2, HDA-PR and HDA-TR

HDA-PR / HDA-TR			**M10**	**M12**	**M16**
Displacement DLS	$\delta_{N,seis(DLS)}$	[mm]	**4,6**	**3,2**	**3,3**
Displacement ULS	$\delta_{N,seis(ULS)}$	[mm]	**11,4**	**8,3**	**8,1**

The definition of seismic performance category C2 is given in Annex C19.

Table 19a: Characteristic values of resistance under shear loads in case of seismic performance category C2 for design acc. to EOTA TR045, HDA-P and HDA-T

HDA-P		**M10**		**M12**			**M16**					**M20**			
Steel failure															
Characteristic resistance	$V_{Rk,s,seis}$ [kN]	**20**		**24**			**56**					**83**			
Partial safety factor	$\gamma_{Ms,seis}$ [1)]	1,25													
HDA-T		**M10**		**M12**			**M16**					**M20**			
Steel failure															
Characteristic resistance	for t_{fix} [mm]	10 ≤ < 15	15 ≤ ≤ 20	10 ≤ < 15	15 ≤ < 20	20 ≤ ≤ 50	15 ≤ < 20	20 ≤ < 25	25 ≤ < 30	30 ≤ < 35	35 ≤ ≤ 60	20 ≤ < 25	25 ≤ < 40	40 ≤ < 55	55 ≤ ≤100
	$V_{Rk,s,seis}$ [kN]	**39** [2)]	**42**	**56** [2)]	**56**	**70**	**84** [2)]	**84**	**93**	**102**	**114**	**144** [2)]	**144**	**165**	**175**
Partial safety factor	$\gamma_{Ms,seis}$ [1)]	1,5													
HDA-P / HDA-T		**M10**		**M12**			**M16**					**M20**			
Concrete pryout failure [4)]															
Partial safety factor	$\gamma_{Mcp,seis}$ [1)]	1,5 [3)]													
Concrete edge failure [4)]															
Partial safety factor	$\gamma_{Mc,seis}$ [1)]	1,5 [3)]													

[1)] In absence of other national regulations.

[2)] only with use of centering washer, t_{fix} = thickness of the base plate without thickness of the centering washer, see Annex B8.

[3)] The partial safety factor γ_2 = 1.0 is included.

[4)] For concrete pryout failure and concrete edge failure see Annex C20.

Table 20a: Displacements under shear loads in case of seismic performance category C2, HDA-P and HDA-T

HDA-P / HDA-T			**M10**	**M12**	**M16**	**M20**
Displacement DLS HDA-P	$\delta_{V,seis(DLS)}$	[mm]	**1,8**	**2,0**	**3,0**	**3,4**
Displacement ULS HDA-P	$\delta_{V,seis(ULS)}$	[mm]	**3,7**	**4,2**	**6,5**	**7,9**
Displacement DLS HDA-T	$\delta_{V,seis(DLS)}$	[mm]	**2,0**	**2,3**	**3,1**	**3,8**
Displacement ULS HDA-T	$\delta_{V,seis(ULS)}$	[mm]	**4,4**	**6,0**	**9,8**	**16,3**

The definition of seismic performance category C2 is given in Annex C19.

Table 19b: Characteristic values of resistance under shear loads in case of seismic performance category C2 for design acc. to EOTA TR045, HDA-PR and HDA-TR

HDA-PR		**M10**		**M12**				**M16**			
Steel failure											
Characteristic resistance	$V_{Rk,s,seis}$ [kN]	**21**		**27**				**57**			
Partial safety factor	$\gamma_{Ms,seis}$ [1)]	1,33									
HDA-TR		**M10**		**M12**				**M16**			
Steel failure											
Characteristic resistance	for t_{fix} [mm]	10 ≤ < 15	15 ≤ ≤ 20	10 ≤ < 15	15 ≤ < 20	20 ≤ < 30	30 ≤ ≤ 50	15 ≤ < 20	20 ≤ < 25	25 ≤ < 35	35≤ ≤ 60
	$V_{Rk,s,seis}$ [kN]	**43** [2)]	**43**	**61** [2)]	**61**	**66**	**76**	**91** [2)]	**91**	**95**	**102**
Partial safety factor	$\gamma_{Ms,seis}$ [1)]	1,33									
HDA-PR / HDA-TR		**M10**		**M12**				**M16**			
Concrete pryout failure [4)]											
Partial safety factor	$\gamma_{Mcp,seis}$ [1)]	1,5 [3)]									
Concrete edge failure [4)]											
Partial safety factor	$\gamma_{Mc,seis}$ [1)]	1,5 [3)]									

[1)] In absence of other national regulations.

[2)] only with use of centering washer, t_{fix} = thickness of the base plate without thickness of the centering washer, see Annex B8.

[3)] The partial safety factor γ_2 = 1.0 is included.

[4)] For concrete pryout failure and concrete edge failure see Annex C20.

Table 20b: Displacements under shear loads in case of seismic performance category C2, HDA-PR and HDA-TR

HDA-PR / HDA-TR			**M10**	**M12**	**M16**
Displacement DLS HDA-PR	$\delta_{V,seis(DLS)}$	[mm]	**1,8**	**2,0**	**3,0**
Displacement ULS HDA-PR	$\delta_{V,seis(ULS)}$	[mm]	**3,7**	**4,2**	**6,5**
Displacement DLS HDA-TR	$\delta_{V,seis(DLS)}$	[mm]	**2,0**	**2,3**	**3,1**
Displacement ULS HDA-TR	$\delta_{V,seis(ULS)}$	[mm]	**4,4**	**6,0**	**9,8**

The definition of seismic performance category C2 is given in Annex C19.

Table 21: Recommended seismic performance categories for anchors [1)]

Seismicity level[a]		**Importance Class acc. to EN 1998-1:2004, 4.2.5**			
Class	$a_g \cdot S$ [c]	**I**	**II**	**III**	**IV**
Very low[b]	$a_g \cdot S \leq 0{,}05\ g$	No additional requirement			
Low[b]	$0{,}05\ g < a_g \cdot S \leq 0{,}1\ g$	C1	C1 [d] or C2 [e]		C2
> low	$a_g \cdot S > 0{,}1\ g$	C1	C2		

[a] The values defining the seismicity levels are may be found in the National Annex of EN 1988-1.
[b] Definition according to EN 1998-1, 3.2.1.
[c] a_g = Design ground acceleration on Type A ground (EN 1998-1, 3.2.1),
S = Soil factor (see e.g. EN 1998-1, 3.2.2).
[d] C1 for attachments of non-structural elements
[e] C2 for connections between structural elements of primary and/or secondary seismic members

[1)] The seismic performance of anchors subjected to seismic loading is categorized by performance categories C1 and C2. The assessment is carried out according to ETAG 001, Annex E.

Table 21 relates the seismic performance categories C1 and C2 to the seismicity level and building importance class. The level of seismicity is defined as a function of the product $a_g \cdot S$, where a_g is the design ground acceleration on Type A ground and S the soil factor, both in accordance with EN 1998-1: 2004.

The value of a_g or that of the product $a_g \cdot S$ used in a Member State to define thresholds for the seismicity classes may be found in its National Annex of EN 1998-1 and may be different to the values given in Table 18. Furthermore, the assignment of the seismic performance categories C1 and C2 to the seismicity level and building importance classes is in the responsibility of each individual Member State.

Table 22: Reduction factor α_{seis}

Loading	Failure mode	Single anchor [1)]	Anchor group
tension	Steel failure	1,0	1,0
	Pull-out failure	1,0	0,85
	Concrete cone failure	1,0	0,85
	Splitting failure	1,0	0,85
shear	Steel failure	1,0	0,85
	Concrete edge failure	1,0	0,85
	Concrete pry-out failure	1,0	0,85

1) In case of tension loading single anchor also addresses situations where only 1 anchor in a group of anchor is subjected to tension.

For every failure mode the characteristic seismic resistance $R_{k,seis}$ of a fastening shall be determined as follows:

$$R_{k,seis} = \alpha_{gap} \cdot \alpha_{seis} \cdot R^0_{k,seis}$$

where

α_{gap} reduction factor to take into account inertia effects due to an annular gap between anchor and fixture in case of shear loading;

= 1,0 in case of no hole clearance between anchor and fixture;

= 0,5 in case of connections with standard hole clearance according ETAG 001, Annex C, Table 4.1

α_{seis} reduction factor to take into account the influence of large cracks and scatter of load displacement curves, see Table 22;

$R^0_{k,seis}$ basic characteristic seismic resistance for a given failure mode:

For steel and pullout failure under tension load and steel failure under shear load $R^0_{k,seis}$ (i.e. $N_{Rk,s,seis}$, $N_{Rk,p,seis}$, $V_{Rk,s,seis}$) shall be taken from Annexes C11, C12, C13 and C14 (in case of seismic performance category C1) and from Annexes C15, C16, C17 and C18 (in case of seismic performance category C2).

For all other failure modes $R^0_{k,seis}$ shall be determined as for the design situation for static and quasi-static loading according to ETAG 001, Annex C or CEN/TS 1992-4 (i.e. $N_{Rk,c}$, $N_{Rk,sp}$, $V_{Rk,c}$, $V_{Rk,cp}$).